THIS DRAWING AND THE INFORMATION CONTAINED HEREIN IS THE PROPERTY OF MEASUREMENT SPECIALTIES, INC, AND SHALL NOT BE USED, REPRODUCED, PUBLISHED OR DISCLOSED TO OTHERS WITHOUT THE EXPRESS WRITTEN CONSENT OF MEASUREMENT SPECIALTIES, INC.

REVISIONS

REV	DESCRIPTION	REL	DATE	APPROVED
A	INITIAL RELEASE	P.T	7-6-09	
B	REVISED(ADD LASER MARKING)	P.T	10-29-09	

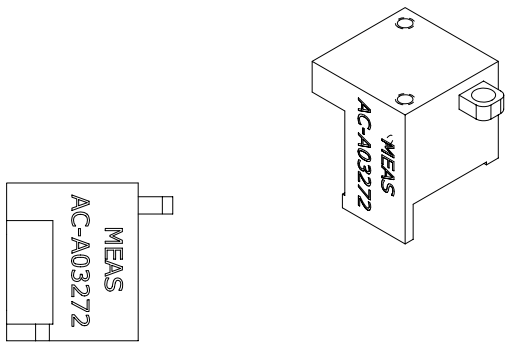

LASER MARKING THE BLOCK

①

②

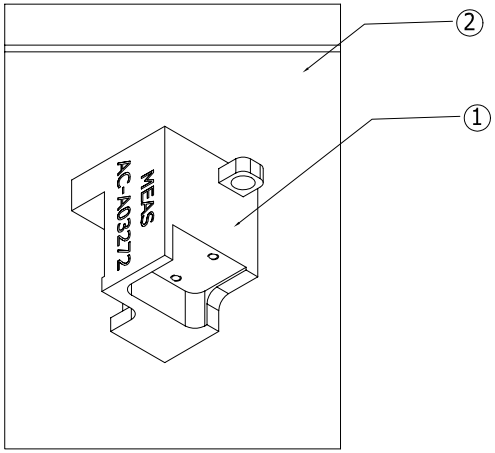

PUT TRIAX MOUNTING BLOCK INTO A ZIP LOCK BAG.

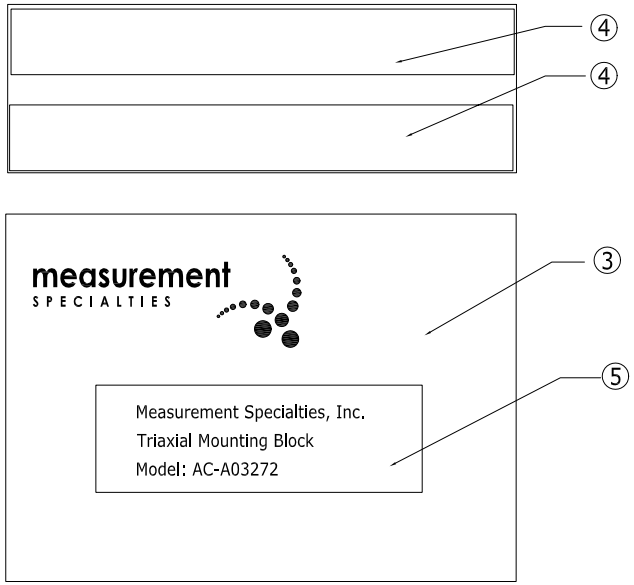

1) PUT THE ZIP LOCK BAG BETWEEN THE TWO PACKING SPONGE. 10 PCS IN EACH BOX.
2) FIX A LABEL ON THE PACKING BOX AFTER MARK THE LABEL AS SHOWN.
③ 3) TEXT SIZE: 3mm HIGH X 100% (#2 STANDARD WIDTH) WIDE.

PARTS LIST

ITEM	P/N	Description	QTY
1	AC-D03326	TRIAX MOUNTING BLOCK	1
2	1004174-5	BAG,ZIP LOCK,3x4"	1
3	ENR-2PCK-014A	BOX BIG	0.1
4	ENR-2PCK-016A	PACKING SPONGE BLACK	0.2
5	AC-H02056	1-1/7" X 3-1/2" LABEL	0.1

UNLESS OTHERWISE SPECIFIED, ALL DIMENSIONS ON THIS DRAWING ARE IN INCHES AND SHALL BE INTERPRETED PER ANSI Y14.5M-1994. TOLERANCES ARE AS FOLLOWS:

FRACTIONS	DECIMALS	ANGLES
±	.XX ±	±
	.XXX ±	

MATERIAL:

FINISH:

THIRD ANGLE PROJECTION

APPROVALS		DATE
DRAWN	PENNY,TAN	7-6-09
CHECKED	AMBIL,RAO	7-6-09
APPROVED		

measurement SPECIALTIES

TITLE 64C TRIAXIAL MOUNTING BLOCK PACK

SIZE	CAGE NO	DWG NO	REV
B		AC-A03272	B

SCALE

SHEET 1 OF 1

MODEL 64C

USED ON	NEXT ASSY